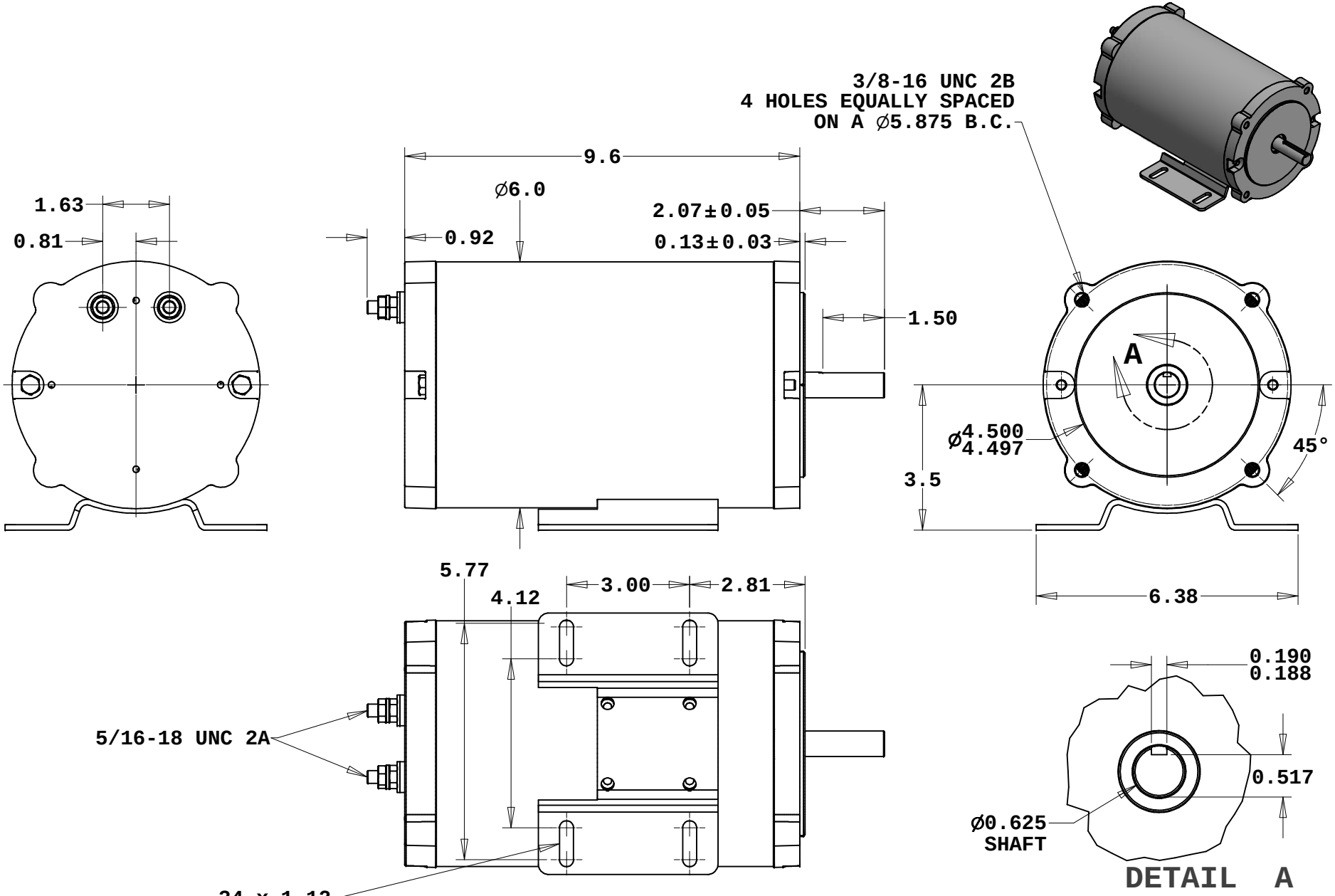

REV	ECO	DATE	DESCRIPTION	DWR	CHKR
B	39487	5/17/2007	UPDATED OUTLINE PRINT PER BOM CHNG	DJG	TL
A		9/9/2003	RELEASED	PLH	TML

FIRST USED
JOB NUMBER: 067633-1-1
MODEL NUMBER: 5A-2409186C

FIRST CREATED
DWR: pete DATE: 9/8/2003
CHKR: DATE:

MATERIAL

SOURCE PRINT

TOLERANCE UNLESS OTHERWISE NOTED
ANGLE - ± 1°
FRACTION - ± 1/64
DECIMAL:
.x = ± .05
.xx = ± .01
.xxx = ± .005
.xxxx = +.0002/-.0003

MET
MINNESOTA ELECTRIC TECHNOLOGY
1507 FIRST AVE.
MANKATO, MN 56001 USA

DWG NO 520-1210A-01
REV B

TITLE
OUTLINE

SCALE 1:1 SIZE C SHEET 1 OF 1